Roller bearing
NNF5028-V-ZEN - NNF5028-V-ZEN

https://www.123bearing.ie/bearing-housing/roller-bearing/roller/nnf5028-v-zen

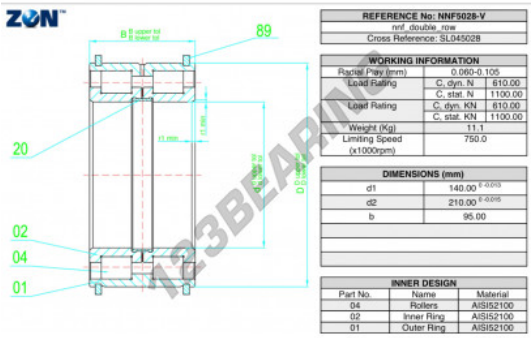

PRODUCT FEATURES

Brand	ZEN
N° Ean13	3616060511522
Inside diameter	140 mm
Outside diameter	210 mm
Thickness	95 mm
Limiting speed	750 rpm
Dynamic load	610 kN
Static load	1100 kN
Packaging	1

contact@123bearing.ie
+33 359 36 04 90
CRT4 de Lesquin 60 Rue Du Haut De Sainghin 59273 Fretin FRANCE